SHIPPING YOUR VEHICLE TO THE ROK

A Guide Designed to Simplify the Vehicle Registration Process

THE OVERALL PROCESS:

1. **Find out vehicle has arrived at Seoul VPC**
2. **Receive temporary plates from Pyongtaek**
3. **Receive written decal from Pass & Registration**
4. **Pick vehicle up from Seoul VPC**
5. **Receive Safety Inspection from Osan AB**
6. **Receive permanent plates from Pyongtaek**

   (Must turn in temp tags at this time)

1. **Register vehicle on base & receive registration decal at Pass & Registration (Bldg 765)**

Now that you know the overall process to ship your vehicle to Korea, we will provide detailed information for each step. Be sure to follow the steps carefully as this process is extensive and contains many requirements.

Anytime you have questions, please call Pass & Registration and ask to speak with a Vehicle Technician,

DSN (315) 784-4489 / 1853

COMM 031-661-4489 / 1853

You may also e-mail this office at:

51SFS.S5P@us.af.mil

STEP 1 –

TRACKING YOUR VEHICLE

PCSMYPOV.COM

Your vehicle will be shipped to the Seoul VPC located at Camp Kim near Yongsan Army Garrison.

The above website will assist you in locating your vehicle and notifying you of it's arrival at the port. It also contains directions, working hours, and contact information which you can use to make an appointment for vehicle pick-up.

****YOU MUST SCHEDULE AN APPT WITH THE VPC PRIOR TO RECEIVING TEMPORARY PLATES****

TEMPORARY PLATES ARE ONLY VALID FOR A 10-DAY PERIOD!!!

Seoul VPC Hours of Operation

POV PROCESSING 0800-1600 MONDAY-FRIDAY.

PLEASE ENSURE YOU ARE SIGNED-IN PRIOR TO 1600 AS PROCESSING MAY TAKE UP TO ONE HOUR. VPC IS CLOSED AT 1700.

VPC IS CLOSED SATURDAY AND SUNDAY, AND SELECT LOCAL KOREAN HOLIDAYS - PLEASE CALL IN ADVANCE FOR HOURS.

CELL OR COMMERCIAL ONLY: 02-798-7036
E-mail: ja.chung@ialpov.us

STEP 2 –
RECEIVING TEMPORARY PLATES

The only option of receiving temporary plates for your vehicle is by way of the Pyongtaek vehicle registration office.

OFF BASE
TEMPORARY TAGS WILL BE READY ON THE SPOT
NO WAIT
LOCATED 15 MINUTES OFF BASE; MUST PROVIDE OWN TRANSPORTATION (I.E.: TAXI/BORROW A CAR)

Driving map is provided on Page 5.
If you need to contact Pyeongtaek, their phone number is 031-8024-5522 / 5523 (From DSN, dial +99 first; from a Cell Phone +031)
SOFA representatives speak English

To Register for 10-DAY Temporary Plates, you MUST have:

1. ID Card (CAC)
2. USFK License (If you have been on Osan less than 30 days, your orders and stateside license are okay.)
3. Proof of Insurance in sponsor's name (Make sure it is accepted within South Korea and the VIN matches title)
4. Title of Motor Vehicle (proof of ownership)
5. Orders/700-19/Letter of Employment
6. Korean Won (last known cost is 1,800 kw) for Temp Reg and Plates
7. Exception to Policy (if applicable)
8. Power of Attorney (if applicable)

FEEL FREE TO HAVE A VEHICLE TECHNICIAN REVIEW YOUR FORMS BEFORE APPLYING FOR TEMP. TAGS WITH PYONGTAEK

-DRIVING DIRECTIONS-

From Osan to Pyongtaek Vehicle Registration Office

1. Depart Osan AB by turning left when exiting Morin Gate
2. Continue straight for approximately 1 mile
You will drive over a bridge and reach a traffic light.
Continue straight through the traffic light.
3. After passing through, continue straight for approximately 1.5 miles
(approx. 2.5 miles total distance traveled)
4. You will reach the first traffic light/intersection on this road. Turn right at the light.
(You will see signs for Highway 317)
5. Follow this road for approximately 4 miles;
You will see a golf course on your upper right-hand side.
(It looks like big poles and a net.)
6. When the golf course is adjacent to the left of your vehicle, you will turn left.
(approx. 6.5 miles total distance traveled)
7. Take the first immediate left on this road. You will see a building resembling a log cabin on your left hand side. This is the vehicle registration office.

To Osan AB from Pyongtaek Vehicle Registration Office

1. Turn right out of the vehicle registration office parking lot.
2. Turn right and move into the right hand lane at the traffic light.
3. Turn right at the traffic light.
You will continue straight on this road *for approx.* 4 miles,
4. When the odometer reads approx. 4 miles, you will see a building with an orange roof on your upper left hand side. You will also see signs for Highway 306.
5. Turn left at this traffic fight onto Highway 306.
6. Follow this road for approximately 1.5 miles.
7. You will then reach a traffic light. (approx. 5.5 miles total trip time on odometer)
8. Continue straight through the traffic light for approximately 1 mile.
You will drive over a bridge and continue towards Osan AB.
When you reach the Y, bear off to the left hand side.
(approx 6.1 miles total trip distance traveled)
**(If you bear to the right, you will reach Doolittle Gate where you can pick-up 24 hour passes for vehicle access).*
9. Morin Gate will be on your right hand side after you drive over the speed bumps.
(approx. 6.5 miles total distance traveled)
You must have a pass for your vehicle to gain access to the installation.

If you need to take a Taxi to this location, they should be able to find it without complication. (Approximately 10,000 won - off base taxi)

The Korean Employees working at the office speak both English and Hangul, and could speak to the taxi driver, if need be. (To call from a cell phone, dial 031-8024-5522/ 5523).

평택시 차량등록사업소에 가주세요

(Show this to taxi driver)

STEP 3 –
RECEIVING WRITTEN DECAL
(USFK FORM 192)

Now that you've received your temporary plates, you must obtain a temporary written decal (USFK Form 192) that allows you access to all USFK Installations. You must have this prior to picking-up your vehicle in Seoul.

You can obtain this pass at Pass & Registration (Building 765) by presenting a Vehicle Technician with the Permit for Temporary Plates you received from Pyongtaek.

AGAIN, BE ADVISED, TEMPORARY PLATES ARE ONLY VALID FOR 10 DAYS. THIS MEANS YOU MUST COMPLETE ALL ADDITIONAL STEPS WITHIN THIS 10-DAY PERIOD AND RETURN THE TEMPORARY PASS TO PASS AND REGISTRATION AND THE TEMPORARY PLATES TO THE PYONGTAEK OFFICE (REGARDLESS OF WHERE YOU OBTAINED THEM). IF YOU DO NOT COMPLY, YOU WILL BE CHARGED 1,000,000 WON.

Display USFK Fm 192 on driver side dashboard at all times.

If you cannot complete all required items within 10 days, you are still responsible for turning in the temporary plates to avoid charges. Your vehicle will have to sit in authorized parking until all other steps are accomplished.

Step 4-
Picking-Up Vehicle From Seoul VPC

You will receive a Korean Customs Import Document from the Seoul VPC. You will need this document to apply for permanent registration. (Example on Page 8)

You will also receive a Shipping Document from the Seoul VPC that you will need to obtain permanent registration. (Example on Page 9)

This form is Not your Safety Inspection.

The Seoul VPC can assist you with your drive back to Osan. Additional information can be found at:
http://www.PCSMYPOV.COM

You must receive a Safety Inspection and Emissions Test at OSAN AB at either the auto hobby shop or the car care center. This is the only authorized facility for personnel stationed at Osan attempting to register a vehicle. Currently there are no certified Area V facilities off base. The cost is $20.00.

Korean Customs Import Document from VPC

Korean Customs Import Document

UNI-PASS

수 입 신 고 필 증

(갑 지)

※ 처리기간 : 3일

① 신고번호	② 신고일	③ 세관.과	⑥ 입항일	⑦ 전자인보이스 제출번호
92000-09-0841546	2009/08/19	039 - 10	2009/08/06	

④ B/L(AWB) 번호	⑤ 화물관리번호	⑧ 반입일	⑨ 징수형태
APLU084311955 (분할 : A)	09APLU08010-0022	2009/08/17	11

⑩ 신 고 자 미8군 .
⑪ 수 입 자 ( )
⑫ 납세의무자 (/ [redacted]
(주소) OSAN AP 96278KOR
(상호) [redacted]
(성명) [redacted]
⑬ 운송주선인 ( )
⑭ 해외거래처 KABEL, D
(US) /

⑮ 통관계획
⑯ 신고구분 D 간이서류신고
⑰ 거래구분 97 SOFA면세물품반입
⑱ 종류 K 일반수입(내수용)
⑲ 원산지증명서 유무
⑳ 가격신고서 유무
㉑ 총중량 1,955.5 KG
㉒ 총포장갯수 1 GT
㉓ 국내도착항 KRPUS 부산항
㉔ 운송형태 10 -FC
㉕ 적출국 US U.S.A
㉖ 선기명 APL CHINA US
㉗ MASTER B/L 번호 APLU084311955
㉘ 운수기관부호

㉙ 검사(반입)장소 039 02044 - 0800000003 (용당세관구내장치장)

● 품명 · 규격 (란번호/총란수 : 1 / 1)

㉚ 품 명 VAN, WITH SPARK-IGNITION ENGINE, USED
㉛ 거래품명 PERSONAL USED VEHICLE
㉜ 상 표 TOYOTA

㉝ 모델 · 규격	㉞ 성분	㉟ 수량	㊱ 단가(USD)	㊲ 금액(USD)
[redacted] 2005 TOYOTA 3500CC GASOLINE AUTO AWD	SIENNA 3.5	[illegible]	12,686	12,686

㊳ 세번부호	8703.24-1020	㊵ 순중량	1,955.5 KG	㊸ C/S 검사	N CS비적용생략	㊺ 사후확인기관
㊴ 과세가격(CIF)	$12,686	[illegible]	1 U	㊹ 검사변경		
	₩15,820,710	㊻ 환급중량		㊺ 원 산 지	US- - -	㊼ 특수세액

㊽ 수입요건확인 (발급서류명)

SAMPLE

SOFA 반입 물품신고서

㊾ 세종	㊿ 세율(구분)	51 감면율	52 세액	53 감면분납부호	감면액	내국세종부호
관	8.00(C가가)	100.00	0	Y6701	(1,265,656)	
개	10.00(2)	100.00		Z000000	(1,582,071)	
육	30.00(B)	100.00			(474,621)	
부	10.00(B)	100.00	0	Z000000	(1,582,071)	

54 결제금액 (인도조건-통화종류-금액-결제방법) CFR -USD - 12,686 - GN
55 총과세가격 $ 12,686 ₩ 15,820,710
57 운 임 1
58 보험료
59 가산금액
60 공제금액
61 납부번호
65 부가가치세과표

61 세종	62 세액
관 세	
개별 소비세	
교 통 세	
주 세	
교 육 세	
농 특 세	
부 가 세	
신고지연가산세	
이신고가산세	

※관세사기재란

66 세관기재란

① 본 수입면장 사본은 대한민국 등록관세에 등록 공정하였다는 증명임
② 총 [illegible] 기타관계법규에 의거 제세를 징수할 때에는 [illegible] 가격을 재결정함
③ : 연세세 매매하거나 양도 또는 대여하지 못함

고수리 세관장 [illegible]

수입신고수리 용당세관장 통관지원과 [illegible]

12 0 AUG 2009
129 0 AUG 2009

69 총세액합계	67 담당자	오현진	071626	68 접수일시	2009/08/19 06:47	69 수리일자

Shipping Document you will need at VPC

SEOUL IV

CUSTOMER COPY- SUV/VAN/STATION WAGON/HATCHBACK

AMERICAN AUTO LOGISTICS VEHICLE INSPECTION AND SHIPPING FORM – VISF

ORDER NUMBER: H1PC000914 / BRANDON VPC	OWNER'S LAST NAME, FIRST & MI: [redacted]	GRADE: O3	POE: H1P	POD: UCP
VEHICLE IDENTIFICATION NUMBER: [redacted]	ODOMETER READING: 34,086	POV YEAR, MAKE, MODEL, COLOR, BODY TYPE, LICENSE NUMBER, STATE: 2005 TOYOTA SIENNA MINI-VAN SILVER AE54 VMG GBR		
RDD: 08/31/2009	DIMENSIONS: L:200.00 W:77.40 H:68.90	WEIGHT: 4310	CUBE: 617.00	PIECES: 1
PACK: VO	COMM CODE: 320			
TCN: F9163XXXXX5267PXX	CONSIGNOR:	CONSIGNEE:	TR ACCOUNT: F97D	NEXT DUTY ADDRESS FOR NOTIFICATION PURPOSES: 607 AIR AND SP OPS OSAN KS 96728 USA

INSPECTED IN MY PRESENCE, CONDITION ACKNOWLEDGED AS CHECKED BELOW, AND CONDITIONS GOVERNING SHIPMENT OF REVERSE ACCEPTED

DATE: 06/12/2009 | SIGNATURE OF OWNER OR AGENT: | NAME OF AGENT: [redacted]

STREET ADDRESS, CITY, STATE, ZIP CODE: [redacted]

USER CODES:	INSPECTOR CODE:	DATE:	INSPECTOR'S PRINTED NAME:	MILEAGE:	USER CODES:	INSPECTOR CODE:	DATE:	INSPECTOR'S PRINTED NAME:	MILEAGE:
X	[illegible]	[illegible]	[illegible]	34086	◆				
T					*				
+					^				
O					✓				

Customer's Initials: _____ HS - Extremely light scratches or swirl marks caused from cleaning or buffing. Small sand or grit particles have left light scratches on paint.

Hood / Roof / Tailgate / L Fender / LF Door / LR Door / L 1/4 Panel / R Fender / RF Door / RR Door / R 1/4 Panel / Rear Bumper / F Bumper

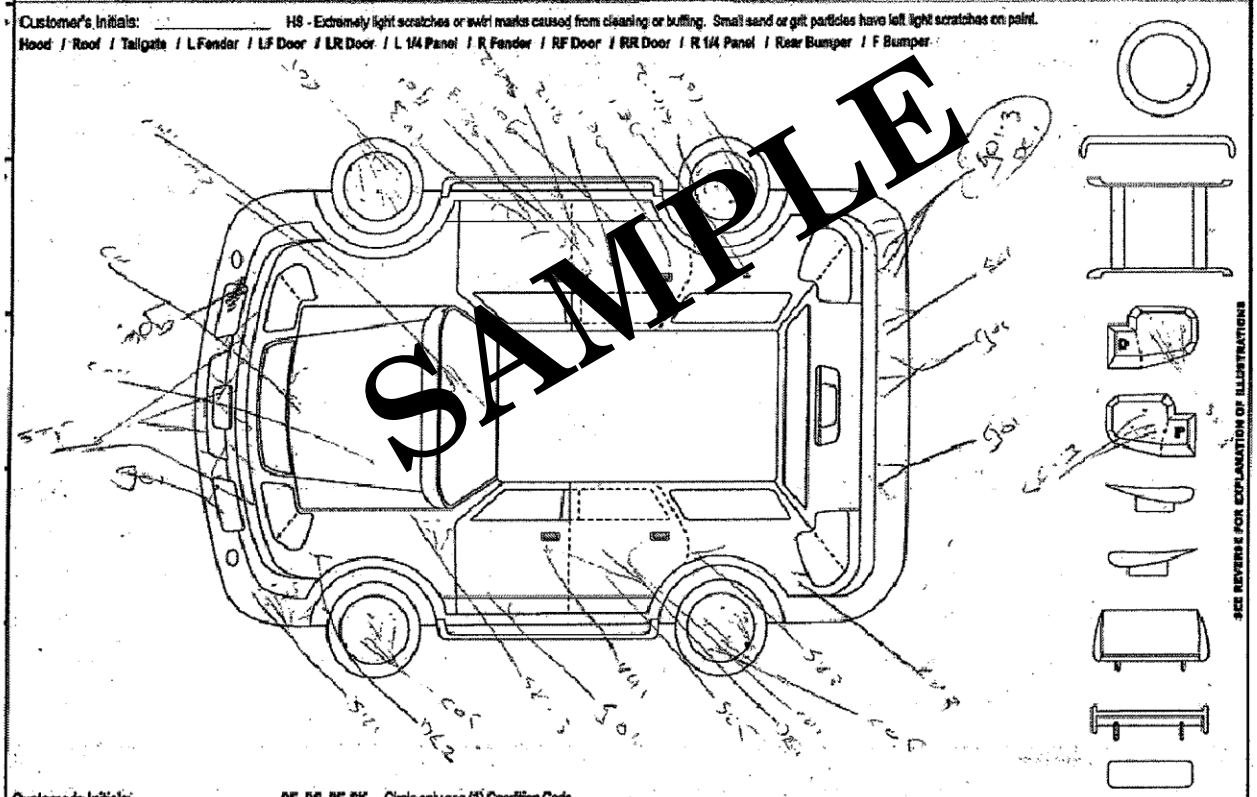

Customer's Initials: _____ DE, DS, PF, SK - Circle only one (1) Condition Code.

Hood / Roof / Tailgate / L Fender / LF Door / LR Door / L 1/4 Panel / R Fender / RF Door / RR Door / R 1/4 Panel / Rear Bumper / F Bumper

ALARM	AFTERMARKET	ALARM DISENGAGED?	KEYS QTY	REMOTE QTY	INTEGRATED QTY	EMERGENCY BRAKE	MILEAGE	FUEL LEVEL CIRCLE ONE (1)
Y/N	Y/N	Y/N	CONDITION:	CONDITION:	CONDITION:	TEST	34086	E 1/8 1/4 1/2 3/4 F

Intensity Codes - Length / Diameter: (1) - Less Than and Including 1" (2) - Over 1" Up To and Including 3" (3) - Over 3" Up To and Including 6" (4) - 6" Up to and Including 12" (5) - Over 12"

Condition Codes:								
BE - Bent	CH - Chipped	FD - Fire Dmg.	HO - Hole	MC - Mechanical	PD - Paint Dmg.	RF - Right Front	SC - Scratch (Plastic)	ST - Stained
BR - Broken	CO - Corroded	FI - Factory Installed	IO - Inoperable	MG - Missing	PF - Paint Fade	RR - Right Rear	SK - Scratch to Clear Coat	TP - Touch - Up
BU - Burned	CR - Cracked	FL - Flat	LO - Loose	MI - Mildewed	PI - Pitted	RS - Rusted	SM - Scratch to Metal	TO - Torn
BW - Body Wave	CU - Cut	FS - Fluid Stain	LF - Left Front	MS - Misaligned	PL - Peeling	RU - Rubbed	SO - Scratch w/ Dent	WO - Worn
BX - Boxed	DE - Dent	GO - Gouge	LR - Left Rear	MT - Mounted	PU - Punctured		SF - Scuffed	WD - Weatherstrip Dmg.
	DS - Discolored	HS - Hairline	MA - Marred	OK - No Exception			SO - Soiled	WP - Will Polish Out

STEP 5-
RECEIVING SAFETY INSPECTION

THE INSPECTION MUST BE PERFORMED AT A DESIGNATED FACILITY ON OSAN AB.
There are no certified off base facilities in Area V.

AUTO CAR CENTER
OR
AUTO HOBBY SHOP

Cost is $20.00

To come on base with your vehicle before you have obtained on base registration, you can receive a temporary vehicle pass at Doolittle Gate.

The Safety Inspection must be performed within 30 days of obtaining a permanent registration.
The date on the receipt of the Safety Inspection must be within 30 days of obtaining permanent registration.

*EXAMPLE OF THIS DOCUMENT
IS AVAILABLE ON PAGE 11*

Inspection form from Auto Hobby Shop

OSAN AUTO HOBBY CENTER

SAFETY AND EMISSION CHECKLIST FOR USFK – POV'S

NAME:	YR:	MODEL:	COLOR:	LICENSE#
[redacted]	2005	Toyota Sienna	Silver	[redacted] (Temp)

ADDRESS:	VIN#
[redacted]	[redacted]

	PASS	FAIL
1. LIGHTS:	—	
a. Adjustment		
b. Dash, Parking, & Interior		
c. Tail, Brake, & Back up		
d. License Plate		
e. Directional		
f. Clearance (If present)		
2. BRAKES		
a. Fluid Level		
b. Pedal travel		
c. Cylinder leakage		
d. Pad/Shoe maximum wear		
e. Brake lines / Hoses		
f. Emergency / Parking Brake		
3. EXHAUST SYSTEM		
a. Muffler Condition (No Leaks)		
b. Tail Pipe Condition (No Leaks)		
c. Exhaust manifold Condition (No Leaks)		
4. STEERING SYSTEM		
a. Steering wheel free travel		
b. Tie rod ends		
c. Drag links		
d. Ball joints		
e. Wheel bearings		
f. Shocks / Struts		
5. Seatbelts		
a. Must be in good working order		
b. Free of cuts		
6. Floorboard		
a. No rust holes		

	PASS	FAIL
7. GLASS	—	
a. Front Windshield no Cracks within Blade area		
b. Rear Window		
c. Side Windows must be operational		
d. Mirrors Interior / Side		
8. WIPER		
a. Blades must free of cracks		
b. Serviceability must operate at all speeds		
c. Windshield washer must be operational		
9. HORN		
a. Must be audible from 200' under normal conditions		
b. Must not emit loud flash sounds or whistle to include playing musical notes or tunes		
10. TIRES		
a. Sidewalls must be free of cracks		
b. Threads must have 1/16" or not at the wear bar		
c. Must not be mixed match / different thread pattern		
11. EMISSIONS		
a. Carbon Monoxide		
b. Hydrocarbon		
c. Smoke (Diesel)		
d. Excessive Air		
e. Year and Month of initial inspection:		
12. Bumper		
a. Must be in original condition		
13. FENDERS		
a. No major dents		
14. DOORS		
a. Must be operational inside / outside		

REMARKS:

FEES: Initial
Re-Inspection on Safety inspection
Re-Inspection on Emissions ONLY

NOTE: Rejected vehicles must be re-inspected within 5 working days to avoid an initial inspection fee.
NOTE: IAW USFK PAMPHLET 200-1 a one time inspection within 30 days

INSPECTOR'S SIGNATURE: Hwang Sh

DATE: 22 Aug 09

51 SVS/SVRSA Office Form 1 Sept 03

SAMPLE

STEP 6 – RECEIVING PERMANENT PLATES/KOREAN REGISTRATION

You only have one option of receiving your permanent plates: Going off base to Pyongtaek DMV.

Temporary plates must be turned in to Pyongtaek before receiving permanent registration.

To receive Korean Registration, you MUST have:

1. ID (CAC)
2. USFK License (If you have been in Osan for less than 30 days, your orders and stateside license are okay.)
3. Proof of Insurance
4. Korean Customs Import Document (from the VPC)
5. Copy of Orders/USFK Fm 700-19/ Letter of Employment
6. Safety Inspection
7. (last known fee amount) 12,800 kw
8. Exception to Policy (if applicable)
9. Power of Attorney (if applicable)

FEEL FREE TO HAVE A VEHICLE TECHNICIAN REVIEW YOUR FORMS BEFORE APPLYING FOR PERMANENT TAGS WITH PYONGTAEK.

STEP 7-
REGISTERING ON BASE
TO RECEIVE REGISTRATION DECAL

Now that your vehicle is registered in Korea, the government recognizes it off base. In order to drive your vehicle on base, you must obtain Base Registration. This is the final step of the registration process and it can only be accomplished at Pass & Registration.

THIS STEP MUST BE ACCOMPLISHED BY SPONSOR ONLY

Plates MUST be affixed to the front and rear of the vehicle prior to receiving registration decal.

After this is accomplished, the following documents will be needed to **FINALIZE** the registration process:

1. Proof of Insurance
2. ID Card (CAC)
3. USFK License
4. Safety Inspection
5. Korean Registration
6. USFK 31EK Application for Registration
7. If military – Copy of Orders
If CTR – USFK Form 700-19
If CIV – Letter of Employment
8. Exception to Policy (if applicable)

We understand that the registration process is an extensive one and our office is attempting to making it as simple as possible. Please understand that we need to maintain these requirements in order to be in compliance with our host nation's laws. Our vehicle technicians are here to assist you throughout this process. Feel free to ask questions any time you may have them if you feel that you do not understand.

All Policies and Regulations For This Process Can Be Found Within USFK Reg 190-1, USFK Reg 190-7, and 51 FWI 31-104.

THANK YOU AND WELCOME TO OSAN ☺